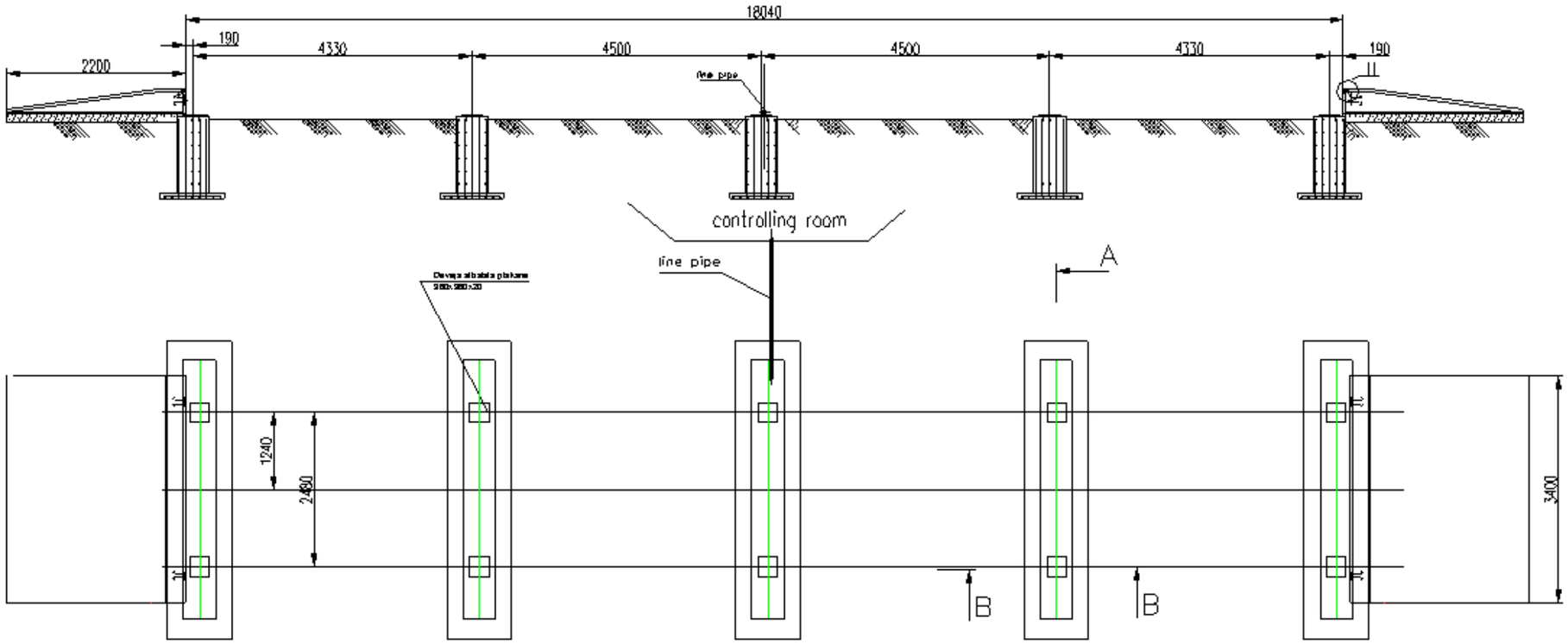

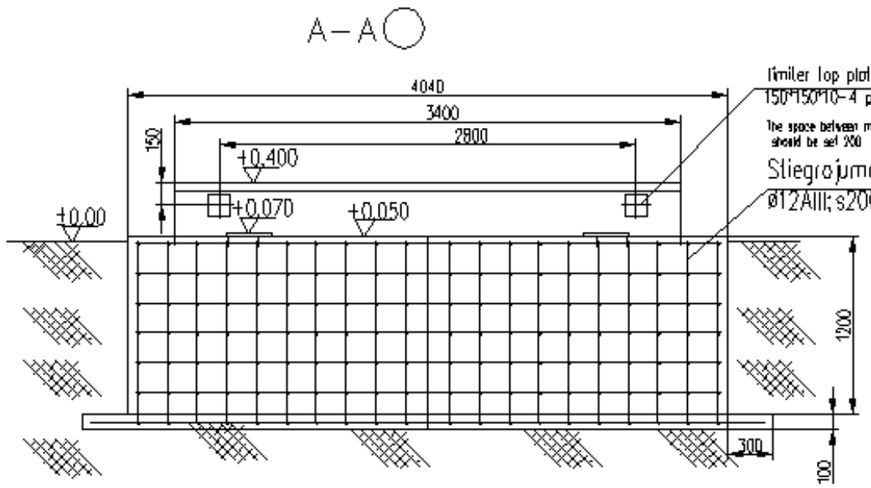

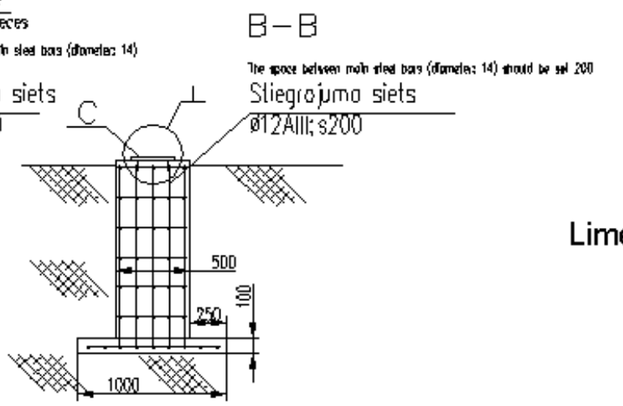

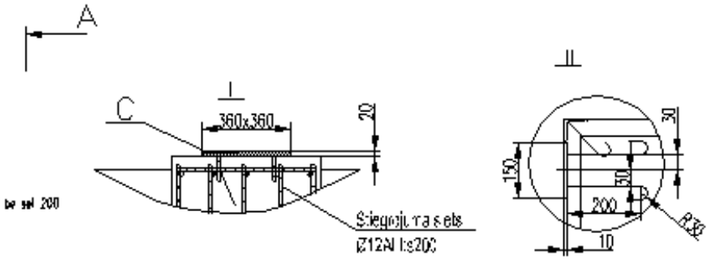

Limena starpiba atbalsta C plaksnem +_ 1mm.

UNLESS OTHERWISE SPECIFIED: DIMENSIONS ARE IN MILLIMETERS SURFACE FINISH: TOLERANCES: LINEAR: ANGULAR:	FINISH:		DEBUR AND BREAK SHARP EDGES	DO NOT SCALE DRAWING	REVISION
	NAME	SIGNATURE	DATE	TITLE:	
DRAWN	Loginovs			Autosvari NT501	
CHK'D	A.Spasovs				
APPV'D	N.Znamenskis				
MFG					
Q.A			MATERIAL:	DWG NO. 3x18m	A3
			WEIGHT:	SCALE:1:2	SHEET 1 OF 1