Detail 1
1:20

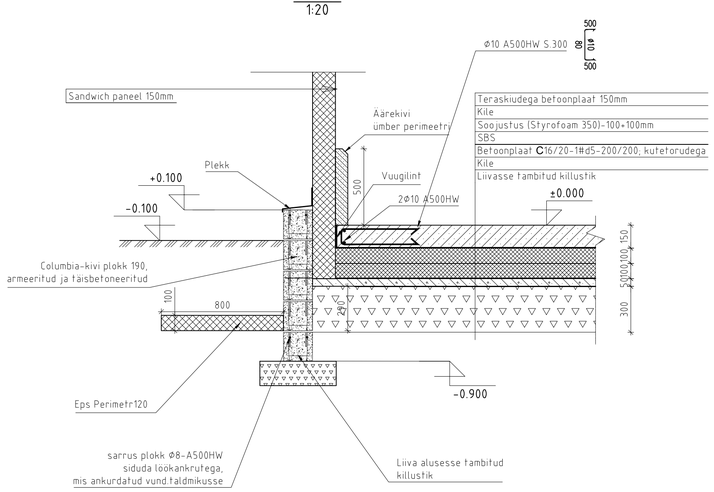

Detail 3
1:20

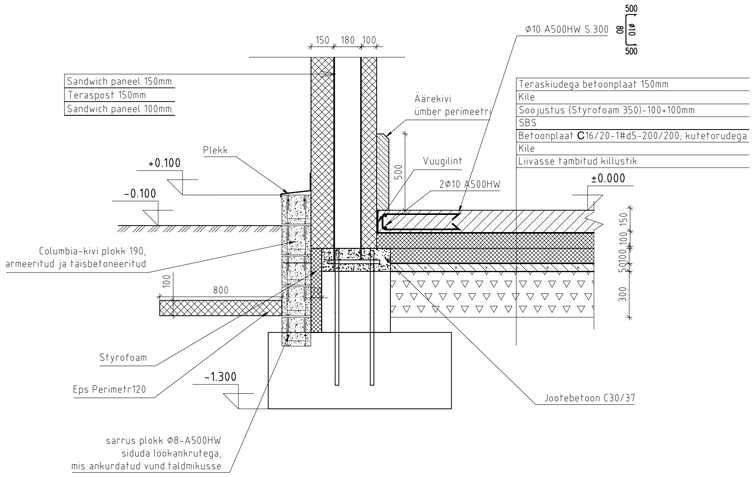

Detail 4
1:20

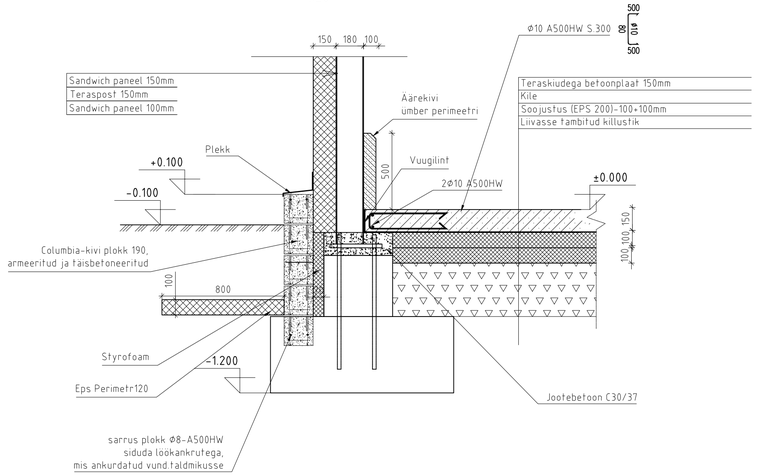

Detail 2
1:20

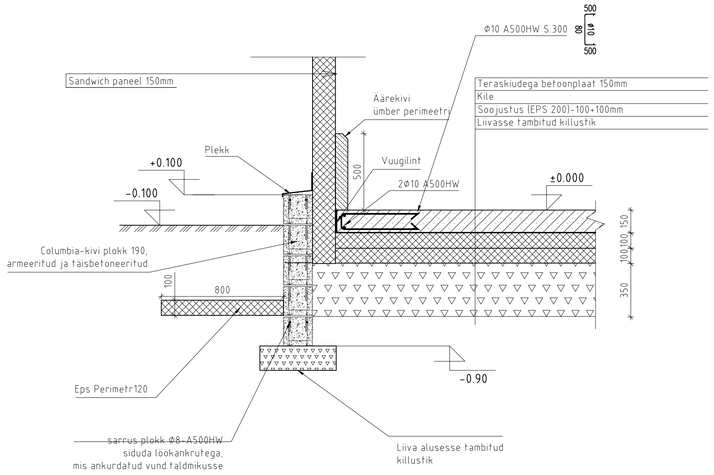
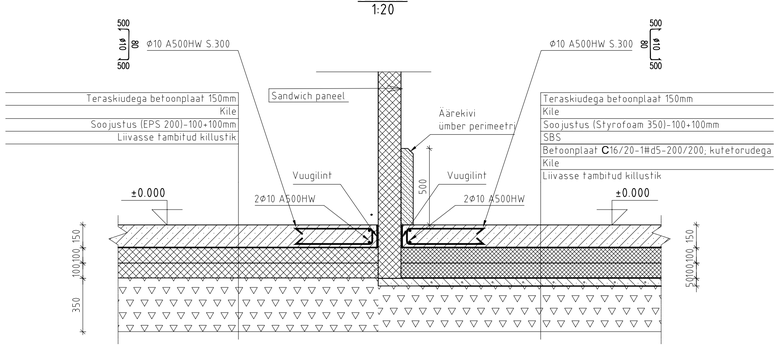
Detail 5
1:20