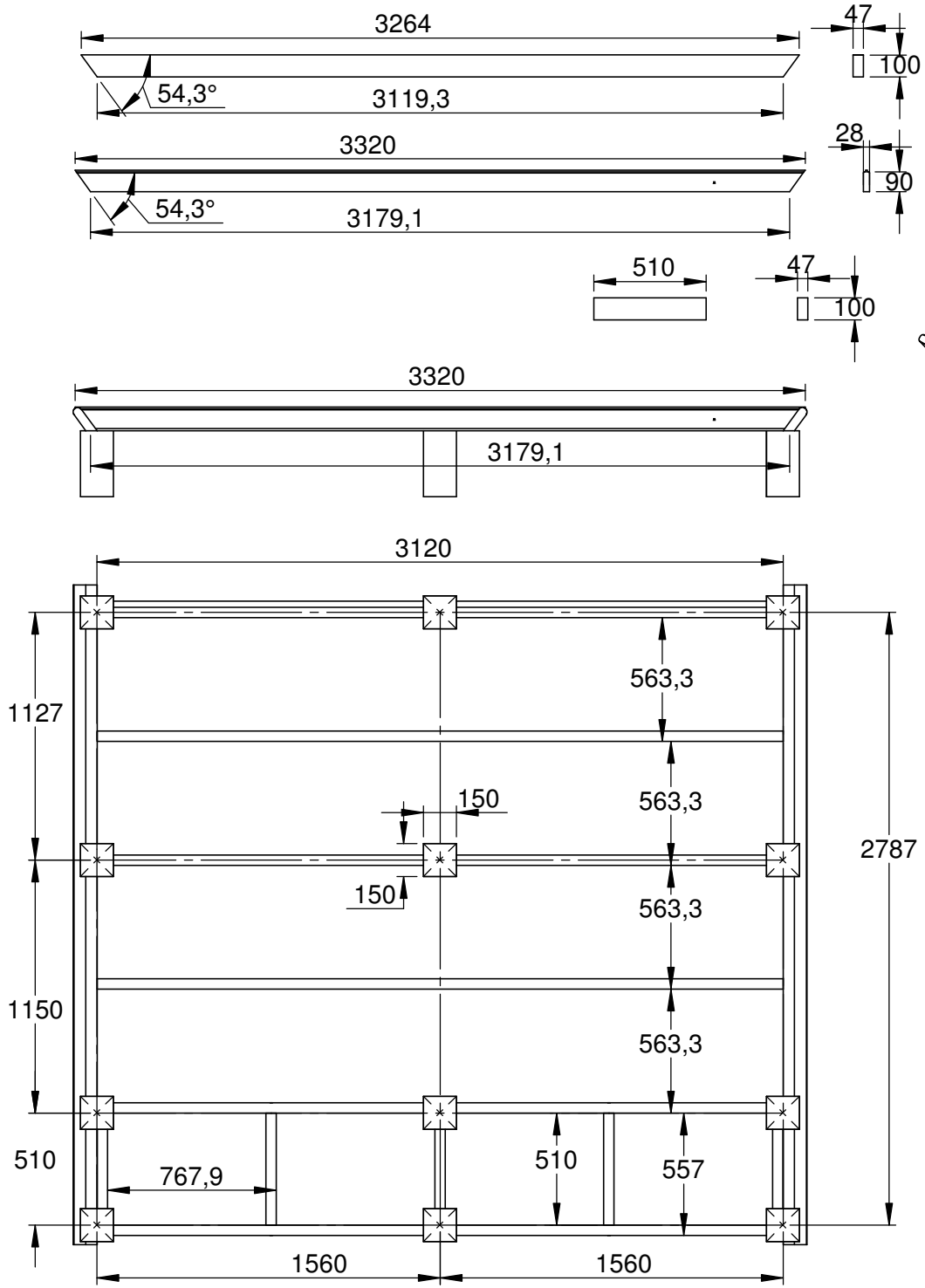

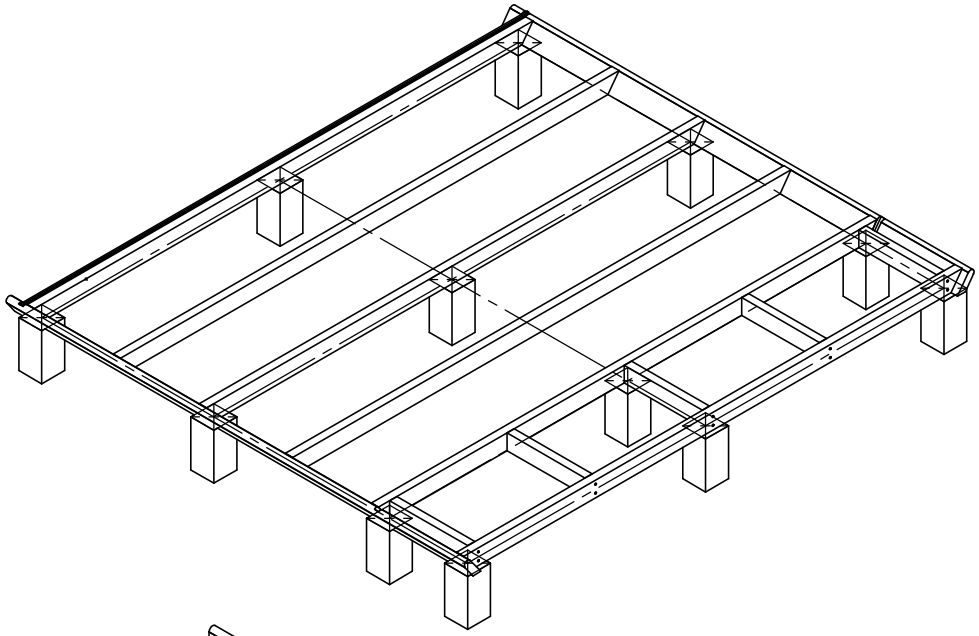

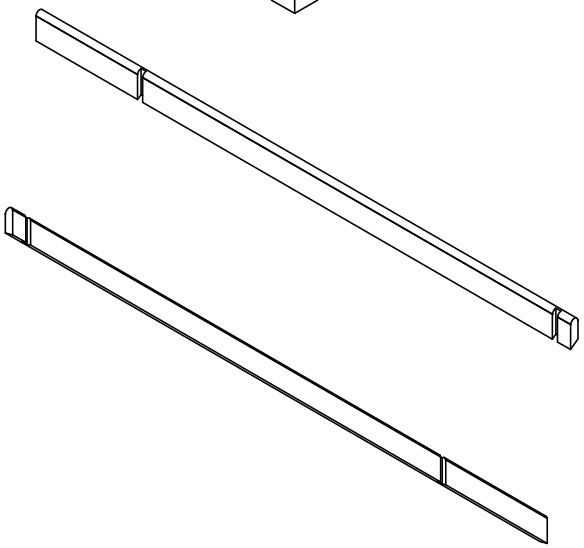

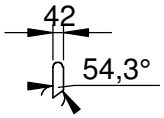

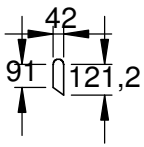

DWG NO.		
Fro_001_3000_AlusRaam		A4
SCALE:1:30	SHEET 1 OF 1	