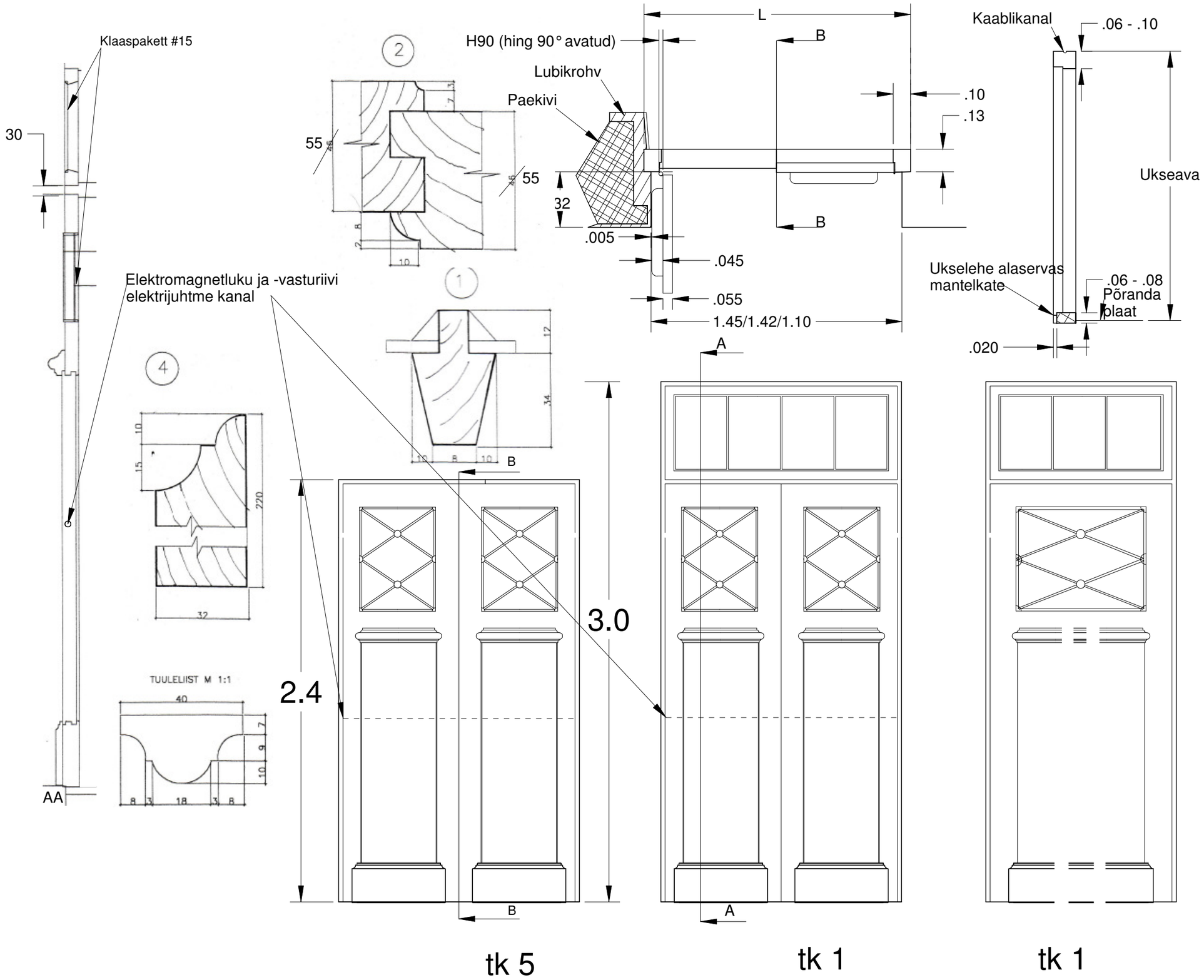

DeltaCad DEMO